Data sheet acquired from Cypress Semiconductor Corporation.
Data sheet modified to remove devices not offered.

TEXAS INSTRUMENTS

CY74FCT16373T
CY74FCT162373T

SCCS054C - August 1994 - Revised October 2003

16-Bit Latches

Features

- **I_{off} supports partial-power-down mode operation**
- **Edge-rate control circuitry for significantly improved noise characteristics**
- **Typical output skew < 250 ps**
- **ESD > 2000V**
- **TSSOP (19.6-mil pitch) and SSOP (25-mil pitch) packages**
- **Industrial temperature range of –40°C to +85°C**
- **V_{CC} = 5V ± 10%**

CY74FCT16373T Features:

- **64 mA sink current, 32 mA source current**
- **Typical V_{OLP} (ground bounce) <1.0V at V_{CC} = 5V, T_A = 25°C**

CY74FCT162373T Features:

- **Balanced 24 mA output drivers**
- **Reduced system switching noise**
- **Typical V_{OLP} (ground bounce) <0.6V at V_{CC} = 5V, T_A= 25°C**

Functional Description

CY74FCT16373T and CY74FCT162373T are 16-bit D-type latches designed for use in bus applications requiring high speed and low power. These devices can be used as two independent 8-bit latches or as a single 16-bit latch by connecting the Output Enable ($\overline{OE}$) and Latch (LE) inputs. Flow-through pinout and small shrink packaging aid in simplifying board layout.

This device is fully specified for partial-power-down applications using I_{off}. The I_{off} circuitry disables the outputs, preventing damaging current backflow through the device when it is powered down.

The CY74FCT16373T is ideally suited for driving high-capacitance loads and low-impedance backplanes.

The CY74FCT162373T has 24-mA balanced output drivers with current limiting resistors in the outputs. This reduces the need for external terminating resistors and provides for minimal undershoot and reduced ground bounce. The CY74FCT162373T is ideal for driving transmission lines.

Logic Block Diagrams

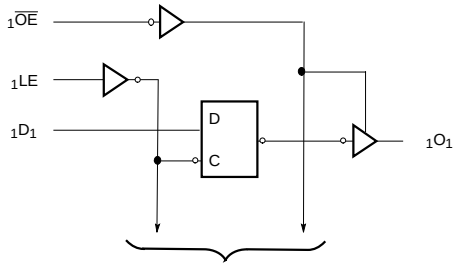

FCT162373-1

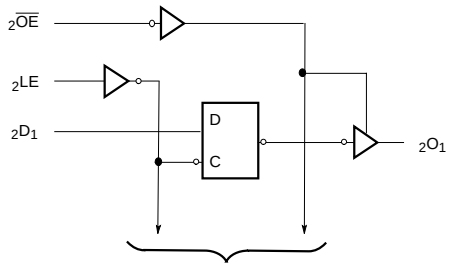

FCT162373-2

Pin Configuration

SSOP/TSSOP/TVSOP
Top View

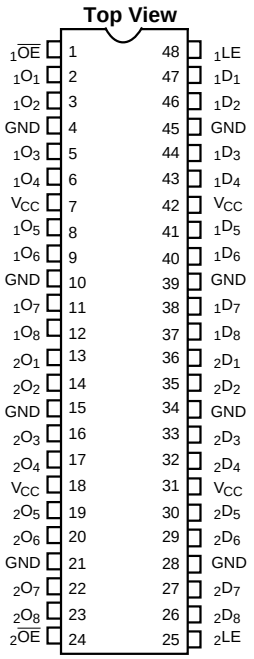

FCT162373-3

Copyright © 2003, Texas Instruments Incorporated

Pin Description

Name	Description
D	Data Inputs
LE	Latch Enable Inputs (Active HIGH)
$\overline{OE}$	Output Enable Inputs (Active LOW)
O	Three-State Outputs

Function Table[1]

Inputs			Outputs
D	**LE**	**$\overline{OE}$**	**O**
H	H	L	H
L	H	L	L
X	L	L	Q_0
X	X	H	Z

Maximum Ratings[2, 3]

(Above which the useful life may be impaired. For user guidelines, not tested.)

Storage Temperature ..... Com'l –55°C to +125°C

Ambient Temperature with Power Applied ..... Com'l –55°C to +125°C

DC Input Voltage .....–0.5V to +7.0V

DC Output Voltage .....–0.5V to +7.0V

DC Output Current (Maximum Sink Current/Pin) .....–60 to +120 mA

Power Dissipation 1.0W

Static Discharge Voltage.....>2001V (per MIL-STD-883, Method 3015)

Operating Range

Range	Ambient Temperature	V_{CC}
Industrial	–40°C to +85°C	5V ± 10%

Electrical Characteristics Over the Operating Range

Parameter	Description	Test Conditions	Min.	Typ.[4]	Max.	Unit
V_{IH}	Input HIGH Voltage		2.0			V
V_{IL}	Input LOW Voltage				0.8	V
V_H	Input Hysteresis[5]			100		mV
V_{IK}	Input Clamp Diode Voltage	V_{CC}=Min., I_{IN}=–18 mA		–0.7	–1.2	V
I_{IH}	Input HIGH Current	V_{CC}=Max., V_I=V_{CC}			±1	µA
I_{IL}	Input LOW Current	V_{CC}=Max., V_I=GND			±1	µA
I_{OZH}	High Impedance Output Current (Three-State Output pins)	V_{CC}=Max., V_{OUT}=2.7V			±1	µA
I_{OZL}	High Impedance Output Current (Three-State Output pins)	V_{CC}=Max., V_{OUT}=0.5V			±1	µA
I_{OS}	Short Circuit Current[6]	V_{CC}=Max., V_{OUT}=GND	–80	–140	–200	mA
I_O	Output Drive Current[6]	V_{CC}=Max., V_{OUT}=2.5V	–50		–180	mA
I_{OFF}	Power-Off Disable	V_{CC}=0V, V_{OUT}≤4.5V[7]			±1	µA

Output Drive Characteristics for CY74FCT16373T

Parameter	Description	Test Conditions	Min.	Typ.[4]	Max.	Unit
V_{OH}	Output HIGH Voltage	V_{CC}=Min., I_{OH}=–3 mA	2.5	3.5		V
		V_{CC}=Min., I_{OH}=–15 mA	2.4	3.5		V
		V_{CC}=Min., I_{OH}=–32 mA	2.0	3.0		V
V_{OL}	Output LOW Voltage	V_{CC}=Min., I_{OL}=64 mA		0.2	0.55	V

Notes:

1. H = HIGH Voltage Level. L = LOW Voltage Level. X = Don't Care. Z = High Impedance. Q_0=Previous state of flip-flop.
2. Operation beyond the limits set forth may impair the useful life of the device. Unless otherwise noted, these limits are over the operating free-air temperature range.
3. Unused inputs must always be connected to an appropriate logic voltage level, preferably either V_{CC} or ground.
4. Typical values are at V_{CC}=5.0V, T_A= +25˚C ambient.
5. This parameter is specified but not tested.
6. Not more than one output should be shorted at a time. Duration of short should not exceed one second. The use of high-speed test apparatus and/or sample and hold techniques are preferable in order to minimize internal chip heating and more accurately reflect operational values. Otherwise prolonged shorting of a high output may raise the chip temperature well above normal and thereby cause invalid readings in other parametric tests. In any sequence of parameter tests, I_{OS} tests should be performed last.
7. Tested at +25˚C.

Output Drive Characteristics for CY74FCT162373T

Parameter	Description	Test Conditions	Min.	Typ.[4]	Max.	Unit
I_{ODL}	Output LOW Current[6]	V_{CC}=5V, V_{IN}=V_{IH} or V_{IL}, V_{OUT}=1.5V	60	115	150	mA
I_{ODH}	Output HIGH Current[6]	V_{CC}=5V, V_{IN}=V_{IH} or V_{IL}, V_{OUT}=1.5V	–60	–115	–150	mA
V_{OH}	Output HIGH Voltage	V_{CC}=Min., I_{OH}=–24 mA	2.4	3.3		V
V_{OL}	Output LOW Voltage	V_{CC}=Min., I_{OL}=24 mA		0.3	0.55	V

Capacitance[5] (T_A = +25˚C, f = 1.0 MHz)

Parameter	Description	Test Conditions	Typ.[4]	Max.	Unit
C_{IN}	Input Capacitance	V_{IN} = 0V	4.5	6.0	pF
C_{OUT}	Output Capacitance	V_{OUT} = 0V	5.5	8.0	pF

Power Supply Characteristics

Parameter	Description	Test Conditions		Typ.[4]	Max.	Unit
I_{CC}	Quiescent Power Supply Current	V_{CC}=Max.	V_{IN}≤0.2V, V_{IN}≥V_{CC}–0.2V	5	500	µA
ΔI_{CC}	Quiescent Power Supply Current (TTL inputs HIGH)	V_{CC}=Max.	V_{IN}=3.4V[8]	0.5	1.5	mA
I_{CCD}	Dynamic Power Supply Current[9]	V_{CC}=Max., One Input Toggling, 50% Duty Cycle, Outputs Open, $\overline{OE}$=GND	V_{IN}=V_{CC} or V_{IN}=GND	60	100	µA/MHz
I_C	Total Power Supply Current[10]	V_{CC}=Max., f_1=10 MHz, 50% Duty Cycle, Outputs Open, One Bit Toggling, $\overline{OE}$=GND, LE=V_{CC}	V_{IN}=V_{CC} or V_{IN}=GND	0.6	1.5	mA
			V_{IN}=3.4V or V_{IN}=GND	0.9	2.3	mA
		V_{CC}=Max., f_1=2.5 MHz, 50% Duty Cycle, Outputs Open, Sixteen Bits Toggling, $\overline{OE}$=GND, LE=V_{CC}	V_{IN}=V_{CC} or V_{IN}=GND	2.4	4.5[11]	mA
			V_{IN}=3.4V or V_{IN}=GND	6.4	16.5[11]	mA

Notes:

8. Per TTL driven input (V_{IN}=3.4V); all other inputs at V_{CC} or GND.
9. This parameter is not directly testable, but is derived for use in Total Power Supply calculations.
10. I_C= $I_{QUIESCENT}$ + I_{INPUTS} + $I_{DYNAMIC}$
    I_C = $I_{CC}+\Delta I_{CC}D_HN_T+I_{CCD}(f_0/2 + f_1N_1)$
    I_{CC} = Quiescent Current with CMOS input levels
    ΔI_{CC} = Power Supply Current for a TTL HIGH input(V_{IN}=3.4V)
    D_H = Duty Cycle for TTL inputs HIGH
    N_T = Number of TTL inputs at D_H
    I_{CCD} = Dynamic Current caused by an input transition pair (HLH or LHL)
    f_0 = Clock frequency for registered devices, otherwise zero
    f_1 = Input signal frequency
    N_1 = Number of inputs changing at f_1
    All currents are in milliamps and all frequencies are in megahertz.
11. Values for these conditions are examples of the I_{CC} formula. These limits are specified but not tested.

Switching Characteristics Over the Operating Range[12]

Parameter	Description	CY74FCT16373AT CY74FCT162373AT		Unit	Fig. No.[13]
		Min.	Max.		
t_{PLH} t_{PHL}	Propagation Delay D to O	1.5	5.2	ns	1, 3
t_{PLH} t_{PHL}	Propagation Delay LE to O	2.0	6.7	ns	1, 5
t_{PZH} t_{PZL}	Output Enable Time	1.5	6.1	ns	1, 7, 8
t_{PHZ} t_{PLZ}	Output Disable Time	1.5	5.5	ns	1, 7, 8
t_{SU}	Set-Up Time HIGH or LOW, D to LE	2.0		ns	9
t_H	Hold Time HIGH or LOW, D to LE	1.5		ns	9
t_W	LE Pulse Width HIGH	3.3		ns	5
$t_{SK(O)}$	Output Skew[14]		0.5	ns	—

Parameter	Description	CY74FCT16373CT CY74FCT162373CT		Unit	Fig. No.[13]
		Min.	Max.		
t_{PLH} t_{PHL}	Propagation Delay D to O	1.5	4.2	ns	1, 3
t_{PLH} t_{PHL}	Propagation Delay LE to O	2.0	5.5	ns	1, 5
t_{PZH} t_{PZL}	Output Enable Time	1.5	5.5	ns	1, 7, 8
t_{PHZ} t_{PLZ}	Output Disable Time	1.5	5.0	ns	1, 7, 8
t_{SU}	Set-Up Time HIGH or LOW, D to LE	2.0		ns	9
t_H	Hold Time HIGH or LOW, D to LE	1.5		ns	9
t_W	LE Pulse Width HIGH	3.3		ns	5
$t_{SK(O)}$	Output Skew[14]		0.5	ns	—

Notes:

12. Minimum limits are specified but not tested on Propagation Delays.
13. See “Parameter Measurement Information” in the General Information section.
14. Skew between any two outputs of the same package switching in the same direction. This parameter is ensured by design.

Ordering Information CY74FCT16373

Speed (ns)	Ordering Code	Package Name	Package Type	Operating Range
4.2	CY74FCT16373CTPACT	Z48	48-Lead (240-Mil) TSSOP	Industrial
	CY74FCT16373CTPVC/PVCT	O48	48-Lead (300-Mil) SSOP	
	CY74FCT16373CTVR	-	48-Lead (173-Mil) TVSOP	
5.2	CY74FCT16373ATPACT	Z48	48-Lead (240-Mil) TSSOP	Industrial
	CY74FCT16373ATPVC/PVCT	O48	48-Lead (300-Mil) SSOP	
	CY74FCT16373ATVR	-	48-Lead (173-Mil) TVSOP	

Ordering Information CY74FCT162373

Speed (ns)	Ordering Code	Package Name	Package Type	Operating Range
4.2	74FCT162373CTPACT	Z48	48-Lead (240-Mil) TSSOP	Industrial
	CY74FCT162373CTPVC	O48	48-Lead (300-Mil) SSOP	
	74FCT162373CTPVCT	O48	48-Lead (300-Mil) SSOP	
5.2	74FCT162373ATPACT	Z48	48-Lead (240-Mil) TSSOP	Industrial
	CY74FCT162373ATPVC	O48	48-Lead (300-Mil) SSOP	
	74FCT162373ATPVCT	O48	48-Lead (300-Mil) SSOP	

Package Diagrams

48-Lead Shrunk Small Outline Package O48

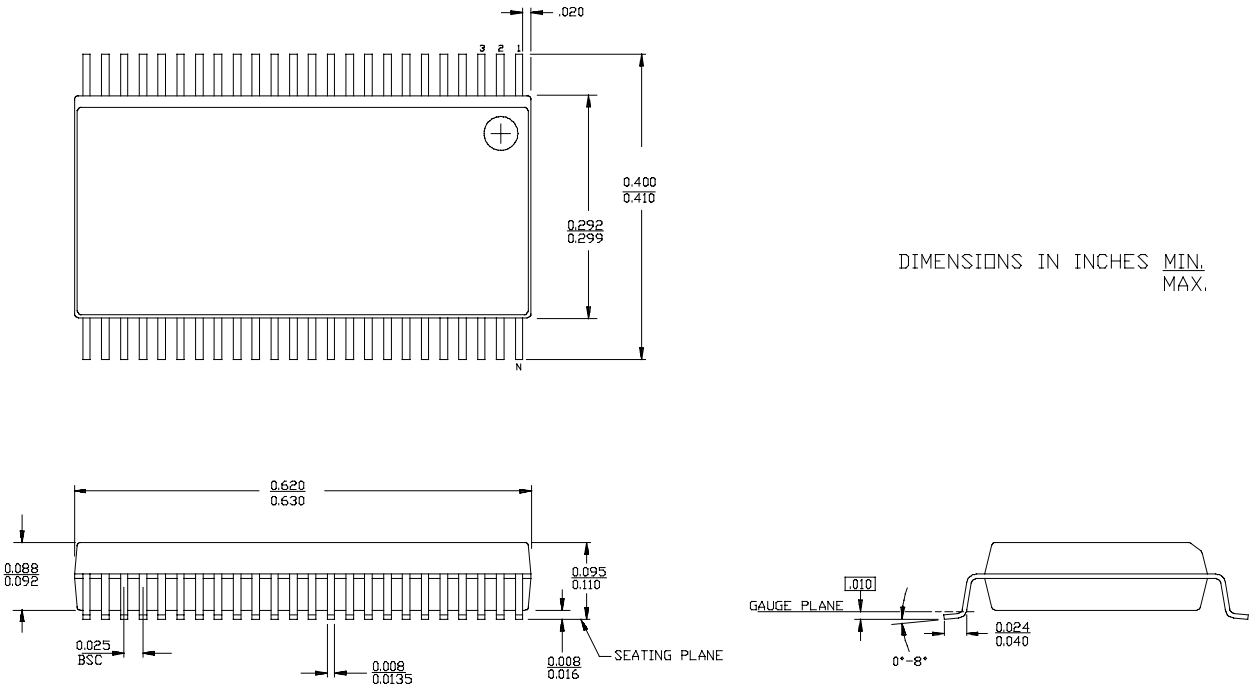

48-Lead Thin Shrunk Small Outline Package Z48

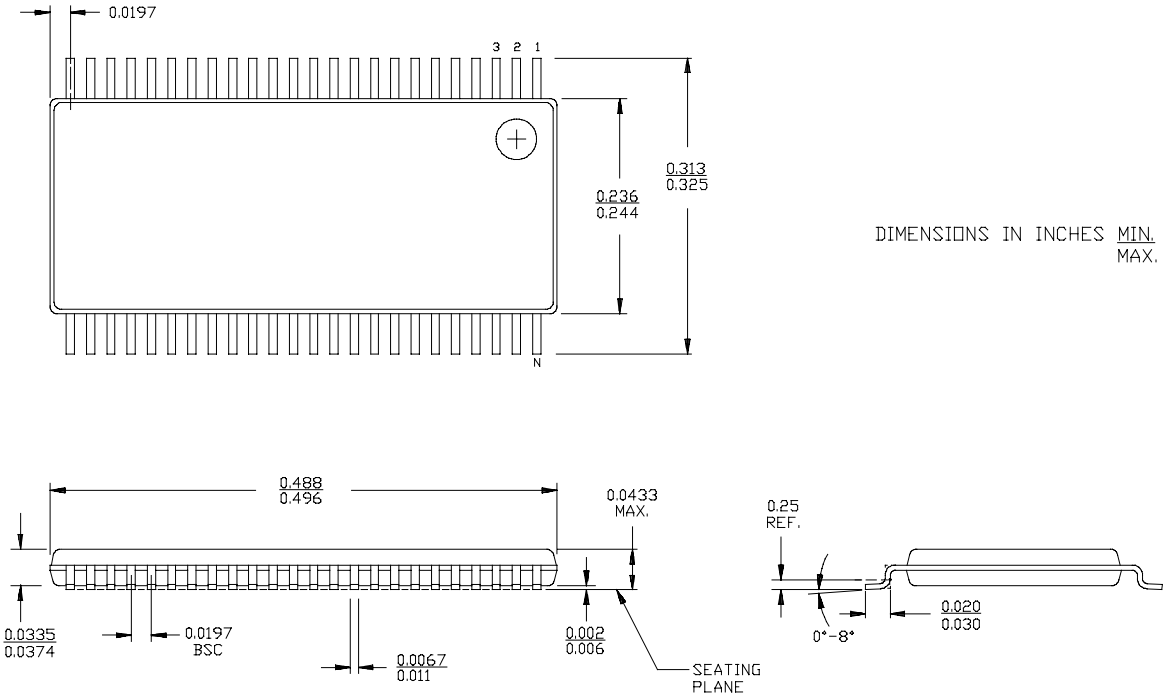

DGV (R-PDSO-G)** **PLASTIC SMALL-OUTLINE**

24 PINS SHOWN

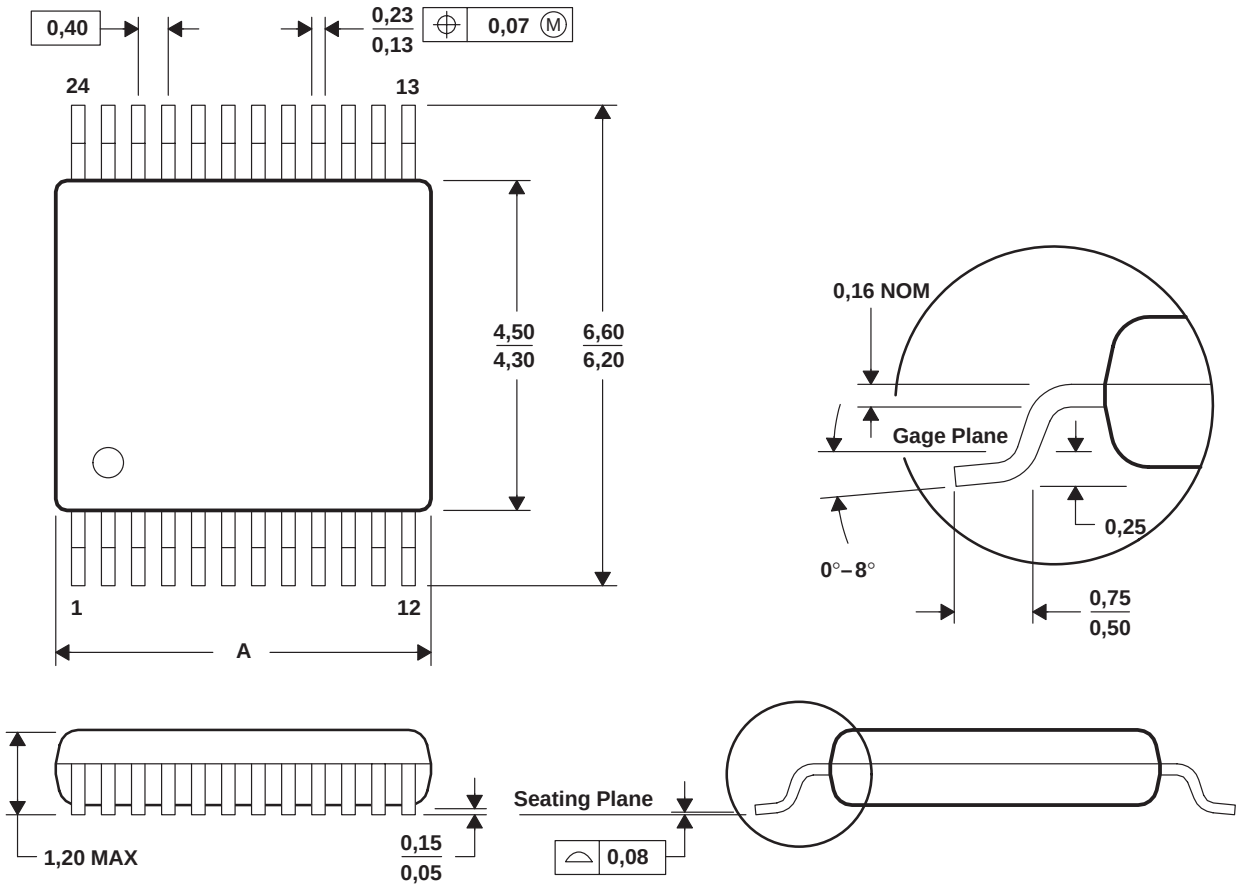

DIM \ PINS **	14	16	20	24	38	48	56
A MAX	3,70	3,70	5,10	5,10	7,90	9,80	11,40
A MIN	3,50	3,50	4,90	4,90	7,70	9,60	11,20

4073251/E 08/00

NOTES: A. All linear dimensions are in millimeters.
B. This drawing is subject to change without notice.
C. Body dimensions do not include mold flash or protrusion, not to exceed 0,15 per side.
D. Falls within JEDEC: 24/48 Pins – MO-153
14/16/20/56 Pins – MO-194

DL (R-PDSO-G)** **PLASTIC SMALL-OUTLINE PACKAGE**

48 PINS SHOWN

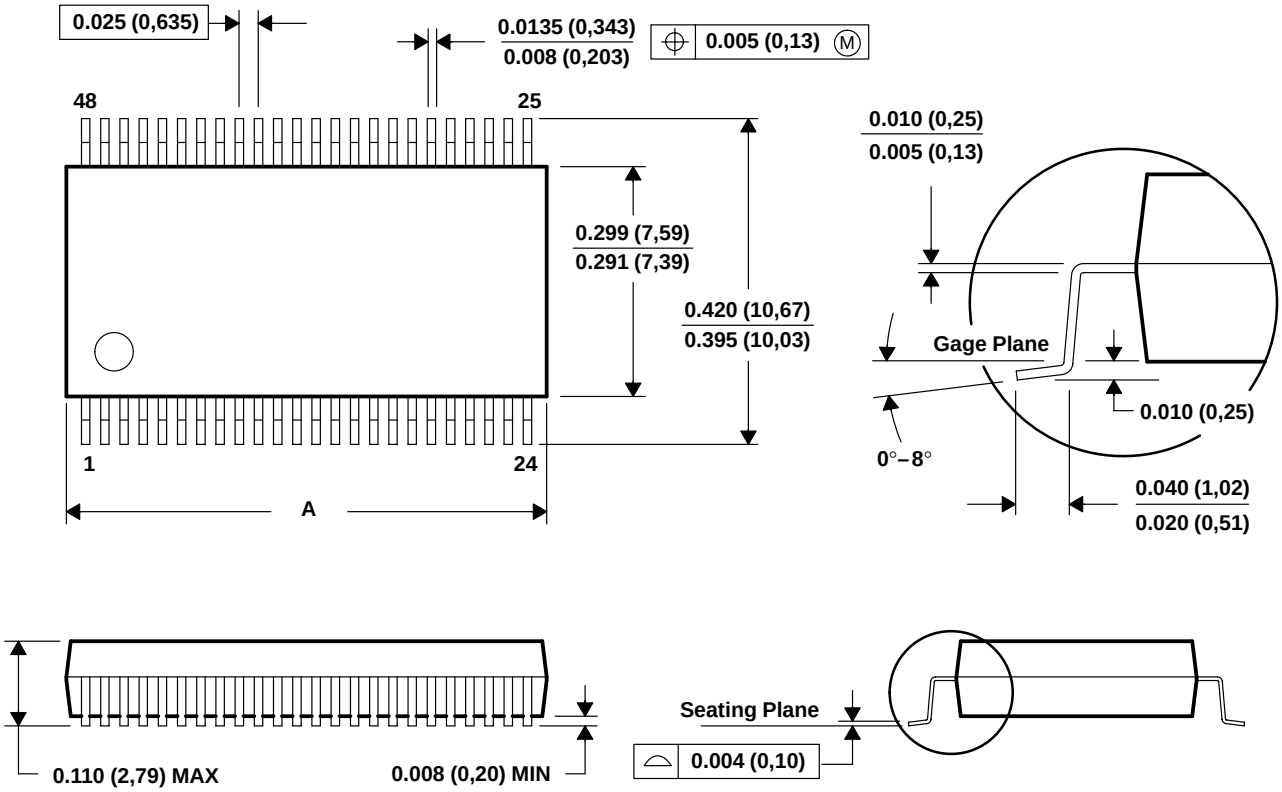

DIM \ PINS **	28	48	56
A MAX	0.380 (9,65)	0.630 (16,00)	0.730 (18,54)
A MIN	0.370 (9,40)	0.620 (15,75)	0.720 (18,29)

4040048/E 12/01

NOTES: A. All linear dimensions are in inches (millimeters).
B. This drawing is subject to change without notice.
C. Body dimensions do not include mold flash or protrusion not to exceed 0.006 (0,15).
D. Falls within JEDEC MO-118

DGG (R-PDSO-G)** **PLASTIC SMALL-OUTLINE PACKAGE**

48 PINS SHOWN

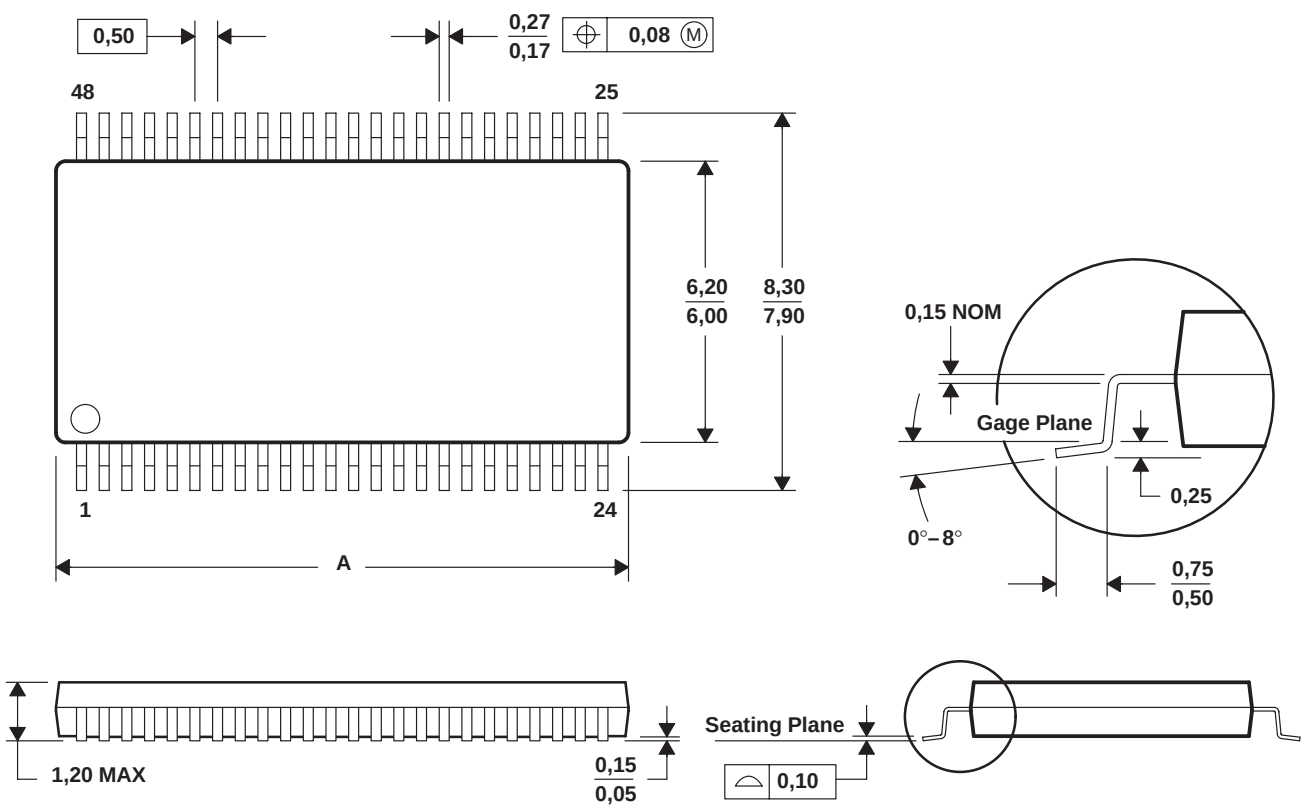

DIM \ PINS **	48	56	64
A MAX	12,60	14,10	17,10
A MIN	12,40	13,90	16,90

4040078/F 12/97

NOTES: A. All linear dimensions are in millimeters.
B. This drawing is subject to change without notice.
C. Body dimensions do not include mold protrusion not to exceed 0,15.
D. Falls within JEDEC MO-153

IMPORTANT NOTICE

Texas Instruments Incorporated and its subsidiaries (TI) reserve the right to make corrections, modifications, enhancements, improvements, and other changes to its products and services at any time and to discontinue any product or service without notice. Customers should obtain the latest relevant information before placing orders and should verify that such information is current and complete. All products are sold subject to TI's terms and conditions of sale supplied at the time of order acknowledgment.

TI warrants performance of its hardware products to the specifications applicable at the time of sale in accordance with TI's standard warranty. Testing and other quality control techniques are used to the extent TI deems necessary to support this warranty. Except where mandated by government requirements, testing of all parameters of each product is not necessarily performed.

TI assumes no liability for applications assistance or customer product design. Customers are responsible for their products and applications using TI components. To minimize the risks associated with customer products and applications, customers should provide adequate design and operating safeguards.

TI does not warrant or represent that any license, either express or implied, is granted under any TI patent right, copyright, mask work right, or other TI intellectual property right relating to any combination, machine, or process in which TI products or services are used. Information published by TI regarding third-party products or services does not constitute a license from TI to use such products or services or a warranty or endorsement thereof. Use of such information may require a license from a third party under the patents or other intellectual property of the third party, or a license from TI under the patents or other intellectual property of TI.

Reproduction of information in TI data books or data sheets is permissible only if reproduction is without alteration and is accompanied by all associated warranties, conditions, limitations, and notices. Reproduction of this information with alteration is an unfair and deceptive business practice. TI is not responsible or liable for such altered documentation.

Resale of TI products or services with statements different from or beyond the parameters stated by TI for that product or service voids all express and any implied warranties for the associated TI product or service and is an unfair and deceptive business practice. TI is not responsible or liable for any such statements.

Following are URLs where you can obtain information on other Texas Instruments products and application solutions:

Products		**Applications**	
Amplifiers	amplifier.ti.com	Audio	www.ti.com/audio
Data Converters	dataconverter.ti.com	Automotive	www.ti.com/automotive
DSP	dsp.ti.com	Broadband	www.ti.com/broadband
Interface	interface.ti.com	Digital Control	www.ti.com/digitalcontrol
Logic	logic.ti.com	Military	www.ti.com/military
Power Mgmt	power.ti.com	Optical Networking	www.ti.com/opticalnetwork
Microcontrollers	microcontroller.ti.com	Security	www.ti.com/security
		Telephony	www.ti.com/telephony
		Video & Imaging	www.ti.com/video
		Wireless	www.ti.com/wireless

Mailing Address: Texas Instruments
Post Office Box 655303 Dallas, Texas 75265

Copyright © 2003, Texas Instruments Incorporated